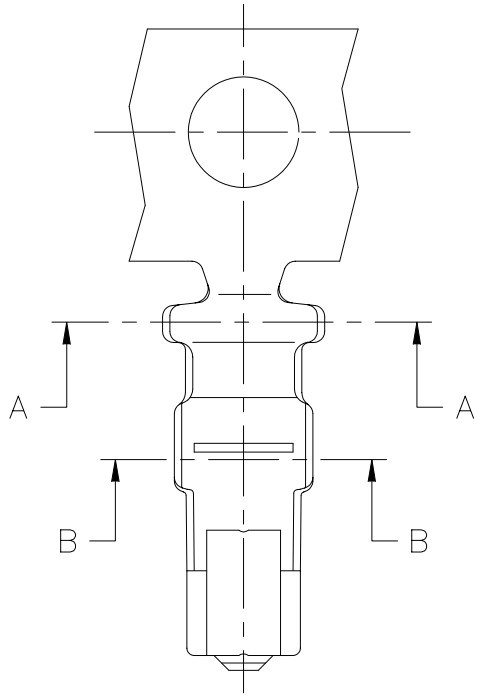

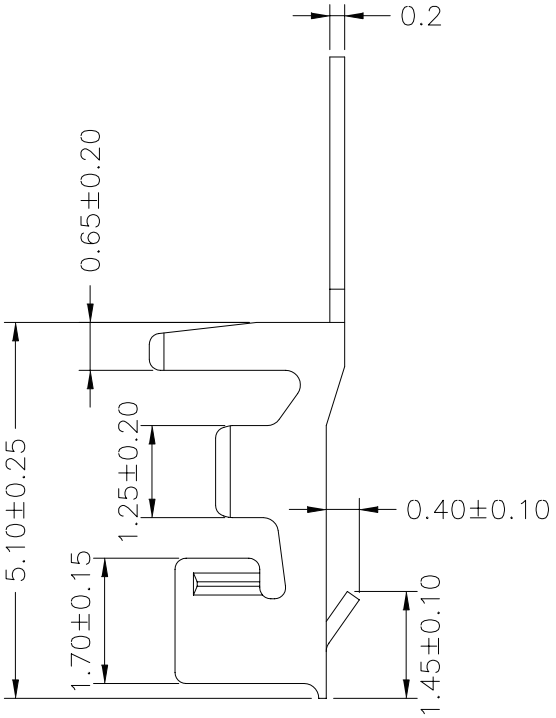

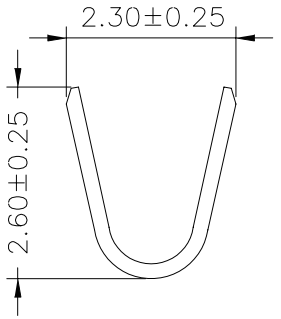

SEC:A–A

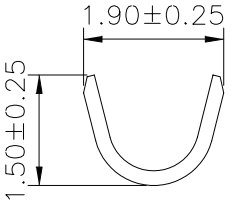

SEC:B–B

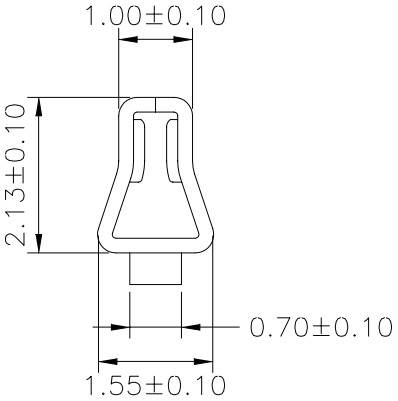

Ordering Information & Specifications

Part No.	Wire Range	Insulation O.D.	Material	Finish	Qty/reel
ILS-T-24	AWG#24–#28	1.40mm(max)	Phosphor Bronze	Tin–plated	10,000pcs

RoHS Compliant

MORETHANALL
PCB CONNECTORS
Cable ASSEMBLIES
煜倫股份有限公司
www.morethanall.com

DRAWING BY CY		TOLERANCES ARE
CHECKED BY GENIUS		X. ±
UNIT / mm	SCALE 1 : 1	.X ±
		.XX ±
		.XXX ±
DATE		ANG ±
SIZE A4	PPOJECTION	

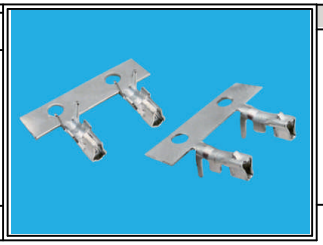

ORDER INFORMATION

ILS-T-24-LF

SERIES — TERMINAL — 24~28 AWG — LEADFREE

DESCRIPTION: 2.00mm PITCH CRIMP TERMINAL