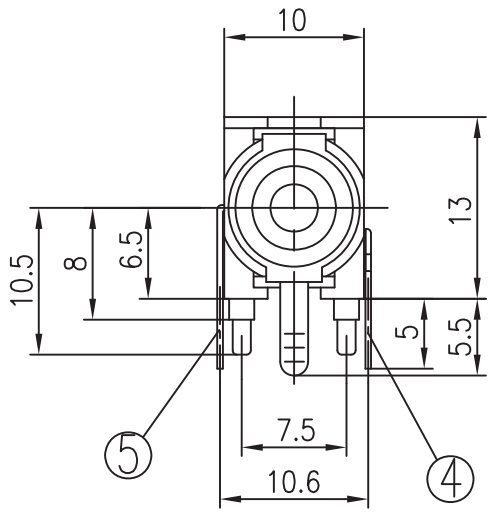

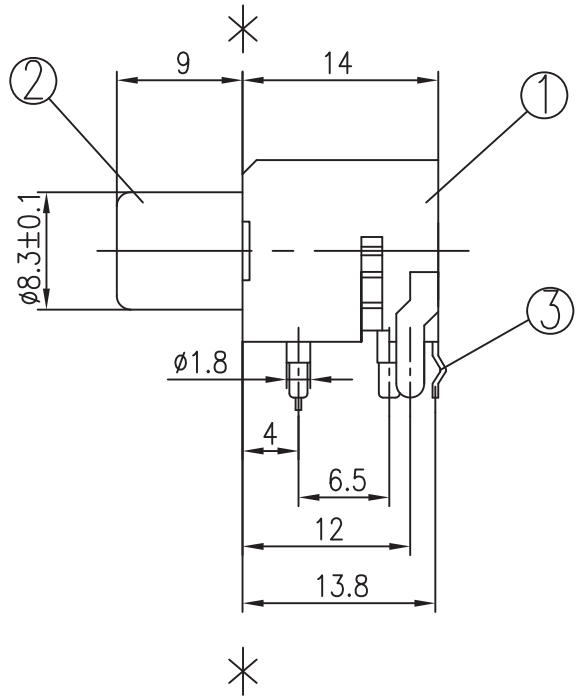

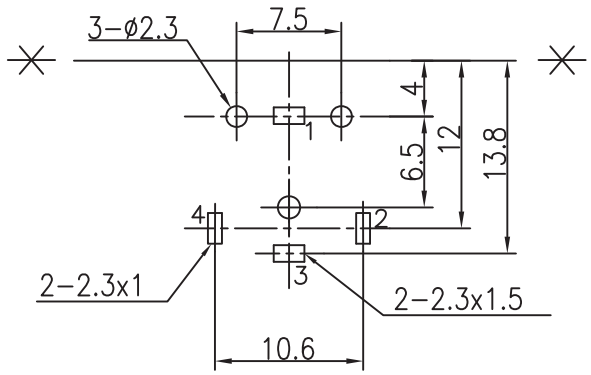

T:1.6 Dimensions of PC board holes

Tolerance : ±0.1(Printed-side view)

Model No.	RCA-JR48P3xx-03	RCA-JR48P3xx-02	RCA-JR48P3xx-04
Schematic	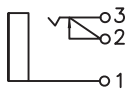	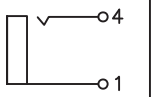	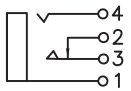

Model No.	COLOR
RCA-JR48P3RD-xx	RED
RCA-JR48P3WH-xx	WHITE
RCA-JR48P3YL-xx	YELLOW
RCA-JR48P3BK-xx	BLACK

LTR	PART NAME	QTY	MATERIAL		REMARK
5	TERMINAL	1	H62y	t=0.45	MB:Cu Cu/Sn PLATED
4	SHUNT SPRING	1	H62y	t=0.35	MB:Cu Ag PLATED
3	TIP SPRING	1	QSn6.5-0.1y	t=0.4	MB:Cu Ag PLATED
2	OUTER CONTACT	1	H65y	t=0.4	MB:Cu Cu/Sn PLATED
1	HOUSING	1	ABS		UL-94HB

UNLESS OTHERWISE SPECIFIED, TOLERANCE ON DECIMAL: ±0.3

RoHS Compliant

MORETHANALL PCB CONNECTORS Cable ASSEMBLIES

煜倫股份有限公司

www.morethanall.com

DRAWING BY CY		TOLERANCES ARE
CHECKED BY GENIUS		X. ±
UNIT / mm	SCALE 1 : 1	.X ±
		.XX ±
DATE		.XXX ±
		ANG ±
SIZE A4	PPOJECTION	

ORDER INFORMATION

RCA-JR48P3xx-xx-LF

SERIES: JACK, DIP 90°, 4.0+8.0mm, POST x 3

WH:WHITE, RD:RED, YL:YELLOW, BK:BLACK

02.03.04 WAY

LEADFREE

DESCRIPTION: RCA PIN JACK