## Features:

- 4 ~ 24 circuits available
- Plastic material: LCP
- Pin material: Brass
- .0246"(0.625mm) square pin
- Pin positioning strip: Mylar, nature
- Recommended PCB thickness: .062"(1.57mm)

Dimensional Information ( mm )

| Circuits | N |
|---|---|
| Dim. A | 3 x ( N / 2 - 1 ) |
| Dim. B | A + 10 |
| Dim. C | A - 4.32 |

&& N = 4 ~ 24

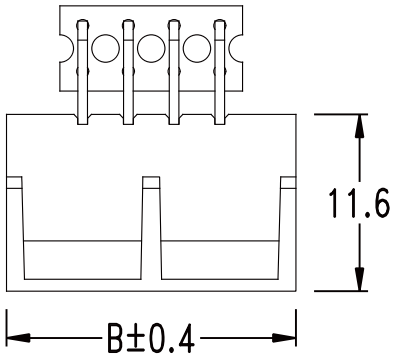


## Specification:

- Voltage rating: 250V AC(RMS) or DC
- Current rating: 5A AC, DC
- Contact resistance: 10mΩ Max.
- Dielectric withstanding voltage: 1500V AC/minute
- Ambient temperature range: -40°C ~ 105°C

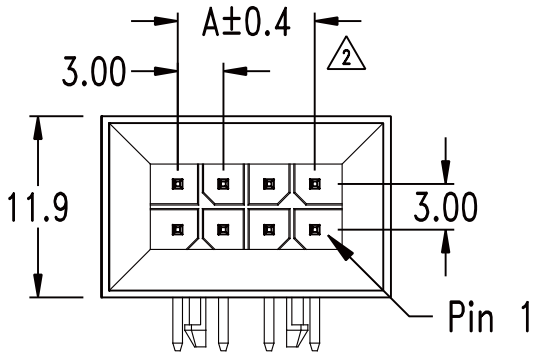


&& xx = 04 ~ 24
x means the u" of gold flash.

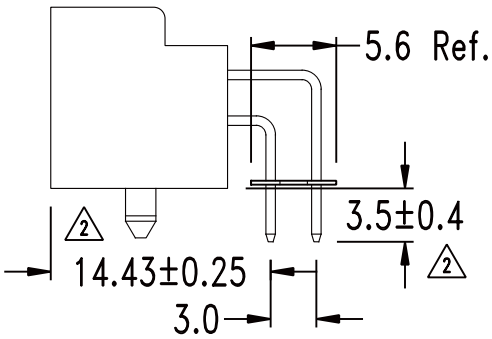


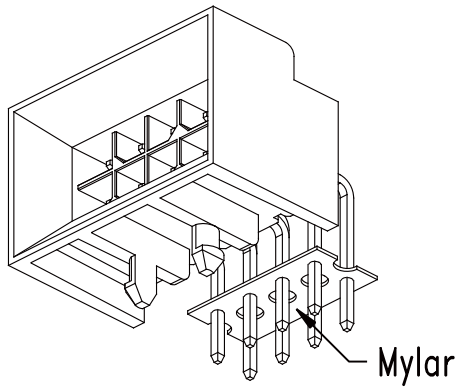


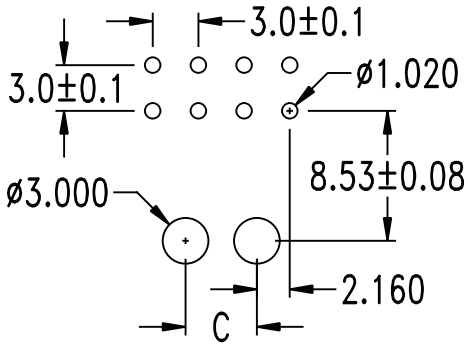


PCB Layout: Component side

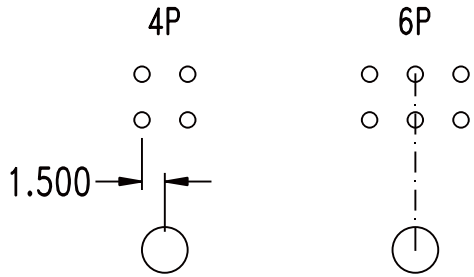


RoHS Compliant

MORETHANALL
PCB CONNECTORS
Cable ASSEMBLIES
煜倫股份有限公司
www.morethanall.com

| | | |
|---|---|---|
| DRAWING BY CY | | TOLERANCES ARE |
| CHECKED BY GENIUS | | X. ± |
| UNIT / mm | SCALE 1 : 1 | .X ± |
| | | .XX ± |
| DATE | | .XXX ± |
| | | ANG ± |
| SIZE A4 | PPOJECTION | |

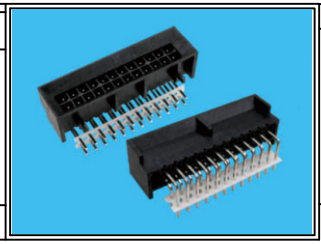

ORDER INFORMATION

MIFB-PRP-2Xxx-LF

SERIES
MALE
DIP 90°
POST
2X02:04WAY
2X12:24WAY
LEADFREE

DESCRIPTION: .118"(3.0mm) Right Angle Header