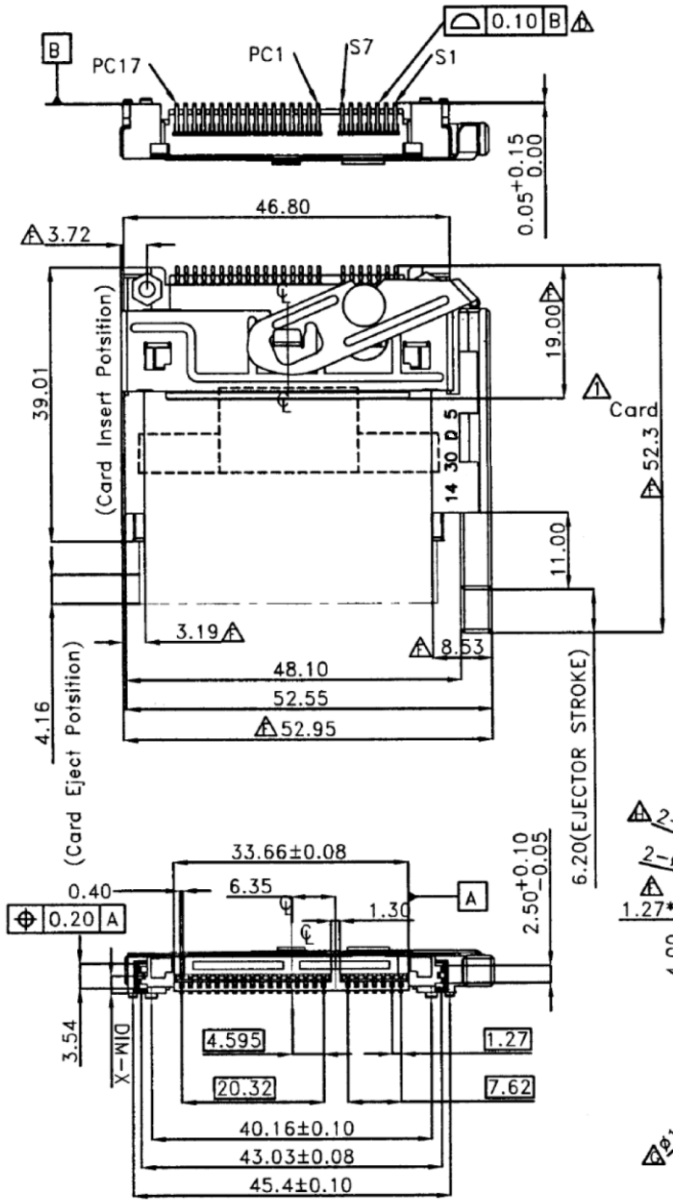

Center Height	DIM-X	DIM-Y	DIM-Z
Stand-off 0	2.45mm	5.7mm	6.55mm
Stand-off 2.0	4.45mm	7.7mm	8.55mm

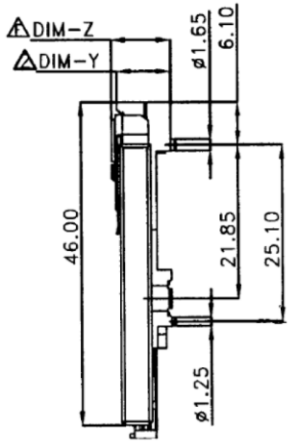

SPECIFICATION
MATERIAL
Insulator: Thermal Plastic ,UL94V-0
Contacts: Copper Alloy
Shell: Steel
CONTACT PLATING
Underplate: 50u"~100u" Nickel
Contact area: 15u" Selective gold
Solder tails area: 100u"~200u" Tin (Lead Free)
ELECTRICAL
Current Rating: 1.5 Amps Max.
Contact Resistance: 30 mohms Max.
Insulation Resistance: 1000 Mohms min. @ 500 VDC
Dielectric Withstanding Voltage: 500 VAC / minute
Temperature Range: -55°C to +85°C

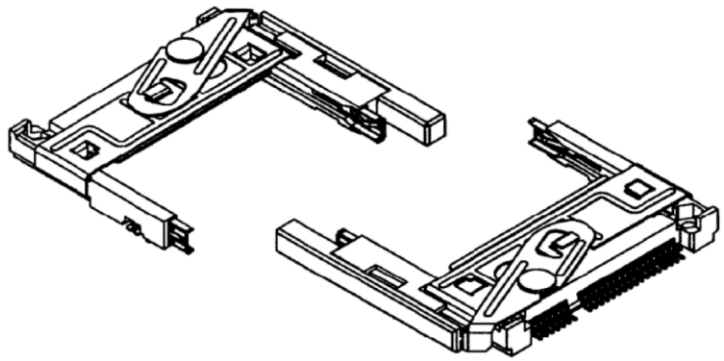

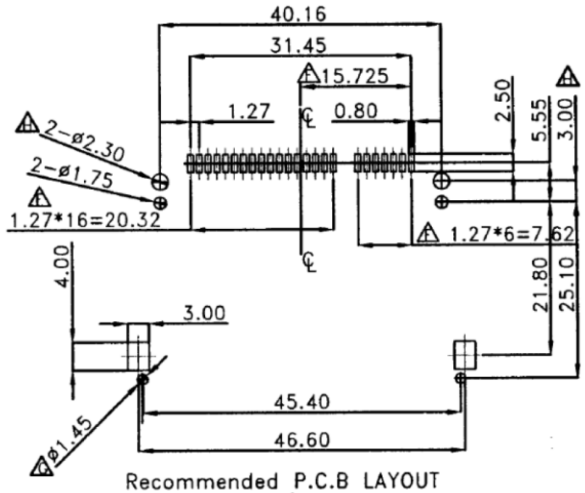

Recommended P.C.B LAYOUT
Tolerance : +/-0.05mm

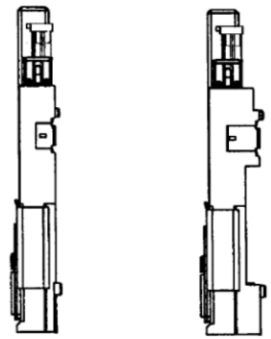

無墊高△ 墊高2.0△

RoHS Compliant

MORETHANALL
PCB CONNECTORS
Cable ASSEMBLIES
煜倫股份有限公司
www.morethanall.com

DRAWING BY CY		TOLERANCES ARE
CHECKED BY GENIUS		X. ± 0.30 .X ± 0.20 .XX ± 0.10 .XXX ± ANG ± 2°
UNIT / mm	SCALE 1 : 1	
DATE		
SIZE A4	PPOJECTION	

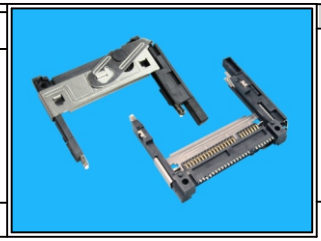

ORDER INFORMATION

CFA-PW40CE1x1RS-24-LF

SERIES
MALE
90°SMT
POST TO POST 40.16mm
C TYPE
EAR TYPE 1
0:STAND OFF 0
2:STAND OFF 2.0
RIGHT EJECTOR
ST
24 WAY
LEADFREE

DESCRIPTION: