30	29.00	31.20	35.00
29	28.00	30.20	34.00
28	27.00	29.20	33.00
27	26.00	28.20	32.00
26	25.00	27.20	31.00
25	24.00	26.20	30.00
24	23.00	25.20	29.00
23	22.00	24.20	28.00
22	21.00	23.20	27.00
21	20.00	22.20	26.00
20	19.00	21.20	25.00
19	18.00	20.20	24.00
18	17.00	19.20	23.00
17	16.00	18.20	22.00
16	15.00	17.20	21.00
15	14.00	16.20	20.00
14	13.00	15.20	19.00
13	12.00	14.20	18.00
12	11.00	13.20	17.00
11	10.00	12.20	16.00
10	9.00	11.20	15.00
09	8.00	10.20	14.00
08	7.00	9.20	13.00
07	6.00	8.20	12.00
06	5.00	7.20	11.00
05	4.00	6.20	10.00
04	3.00	5.20	9.00
03	2.00	4.20	8.00
CKT	DIM A	DIM B	DIM C

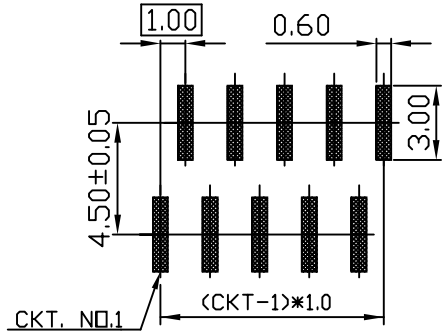

PC BOARD LAYOUT

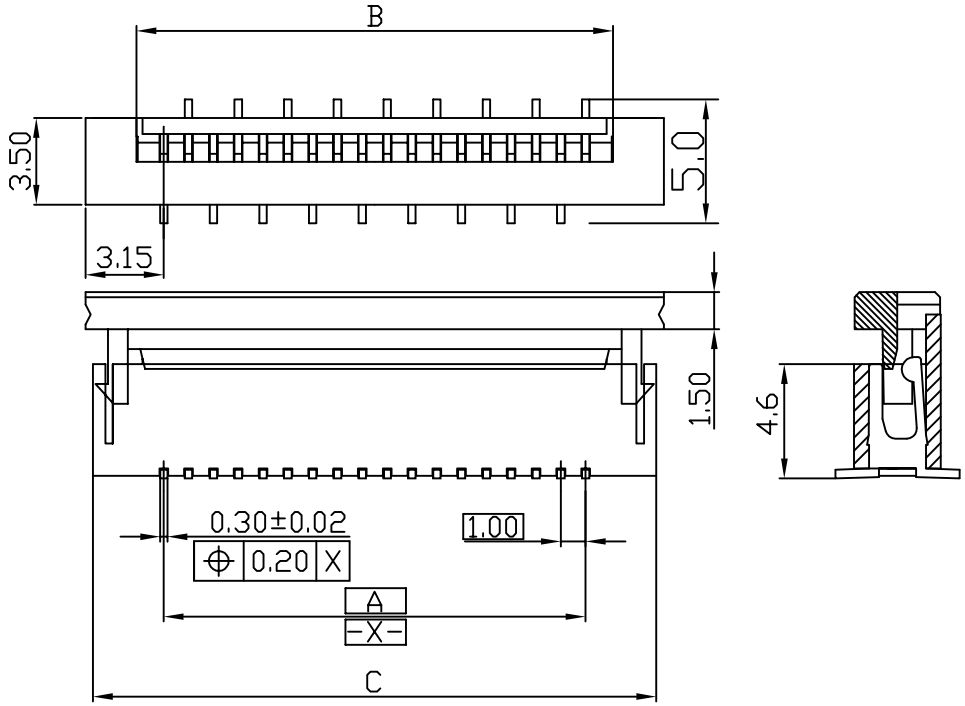

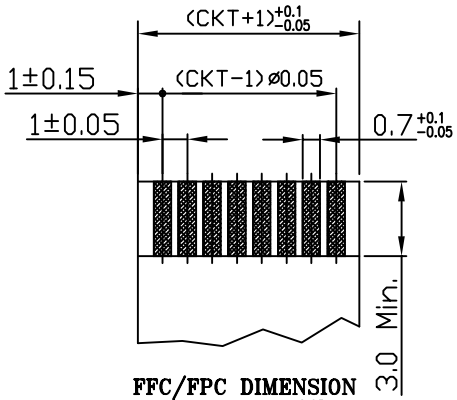

FFC/FPC DIMENSION
THICKNESS 0.3 +0.05 -0.03 mm

NOTES:

1. Material: INSULATOR:L.C.P. ; COVER:L.C.P.
   TERMINAL:PHOSPHOR BRONZE
2. FLASH:0.08mm MAX.
3. CAMBER:0.05mm/cm MAX.
4. WARP:0.05mm/cm
5. DEFORMATION:NA. ,TWIST:NA.

RoHS Compliant

MORETHANALL
PCB CONNECTORS
Cable ASSEMBLIES
煜倫股份有限公司
www.morethanall.com

DRAWING BY CY		TOLERANCES ARE
CHECKED BY GENIUS		X. ±
UNIT / mm	SCALE 1 : 1	.X ±
		.XX ±
DATE		.XXX ±
		ANG ±
SIZE A4	PPOJECTION	

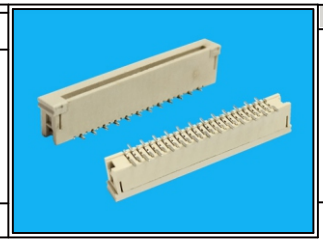

ORDER INFORMATION

FPA-VZAL61-xx-LF

- SERIES: 180°SMT
- ZIF
- SINGLE CONTACT
- L TYPE FOOT POSITION
- HIGH 6.1mm
- 03~30WAY
- LEAD FREE

DESCRIPTION: *ZIF FOR FFC/FPC(1.0mm) ASS'Y(SMT)*